CERTIFICATION

HACCP International

ISO9001

ICE MATE

by HOSHIZAKI

SRM-45A

ICE MAKER

ICEMATE is committed to bringing high-efficiency / energy-saving, and high quality ice-making product to people who have dreams and desire to create their own business with the best scientific technology and manufacturing technology.

DICE

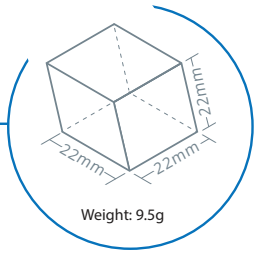

KEY FEATURES

SAFETY AND HYGIENE ASSURED ICE MACHINE

NSF Certified Material for Bin and Scoop

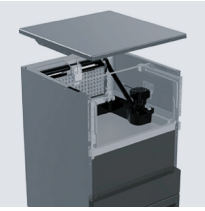

Detachable Parts for Easy Cleaning

Air Filter Prevent Dust from Entering

Stainless Steel

PERFECT FIT & SPACE SAVING

Compact Design for Under-Counter Installations

Front Intake and Exhaust System

EASY MAINTENANCE

IoT

DIMENSIONS

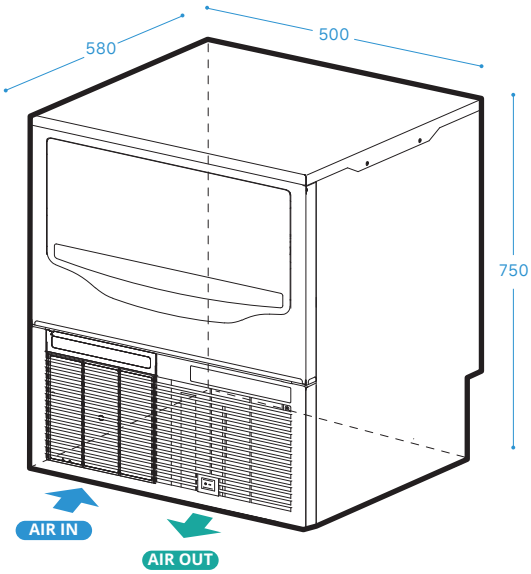

TOP SIDE

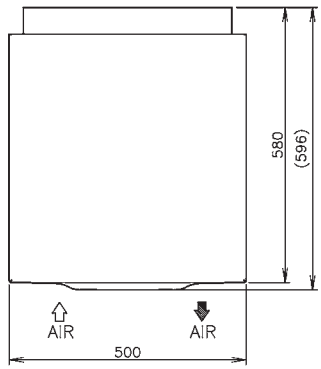

FRONT SIDE

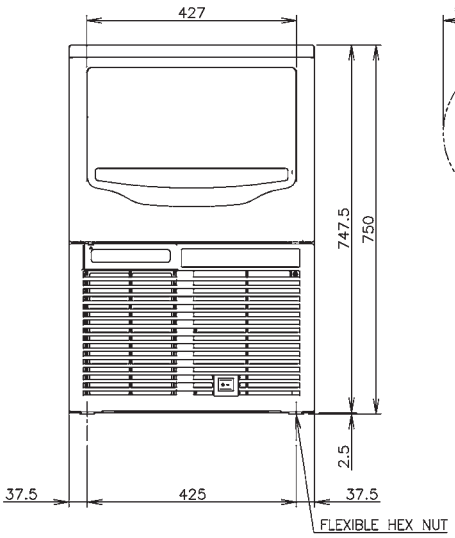

RIGHT SIDE

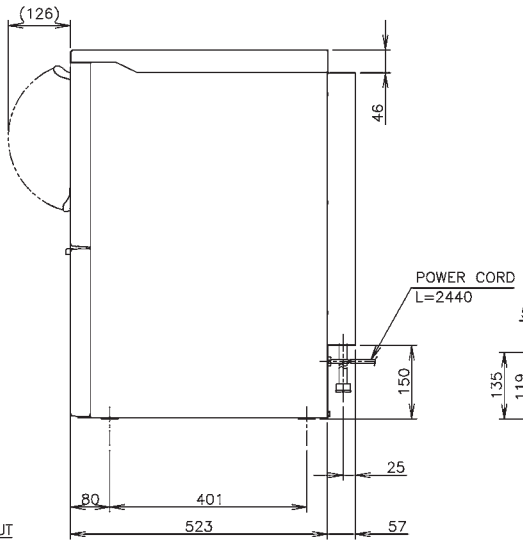

BACK SIDE

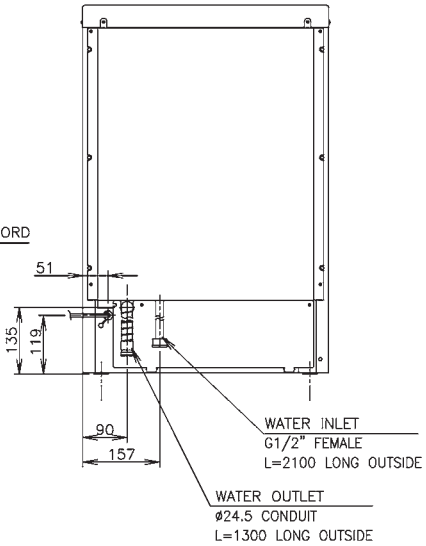

SPECIFICATIONS

Ice Dimensions (W x D x H)	22 x 22 x 22 mm
Outside Dimensions (W x D x H)	500 x 580 x 750 mm
Package Dimensions (W x D x H)	Carton: 625 x 716 x 875 mm
Weight (Net / Gross)	35.5kg / 39.5 kg
Amperage / Starting Amperage	1.71A / 14.9A
Electrical Consumption	270 W
Refrigerant Charge	R134a / 175g
Ice Storage Capacity	Maximum 14kg
Ice Production per 24H	(AT10°C / WT10°C) Approx. 46 kg (AT21°C / WT15°C) Approx. 41 kg (AT32°C / WT21°C) Approx. 34 kg

Water Consumption per 24H	(AT32°C/WT21°C) 0.06m^3(1.8L / kg Ice)
Ice Production Freeze Cycle Time	(AT21°C/WT15°C) 19 min
Ice Production per Cycle	(AT21°C/WT15°C) Approx. 0.5kg / 55 pcs

OPERATING CONDITIONS

Voltage Range	198 - 254 V
Ambient Temperature	5 - 38°C
Water Supply	5 - 32°C
Water Supply Pressure	0.07 - 0.55 Mpa (0.7 - 5.5 bar)
Supply Voltage	1/220 - 230V / 60Hz

HOSHIZAKI

HOSHIZAKI PHILIPPINES CORPORATION
Unit No. GB-2, G/F Agustin 1 Bldg., # 28 F. Ortigas Center, Pasig City, Philippines 1605
TEL +632 8839 2861 | https://hoshizaki-sea.com/